Soul Bath/Shower Mixer with Diverter

TASOULDIVERT

- 35mm Cartridge
- Chrome Finish
- Push/Pull Diverter Button

Backplate Diameter: 140mm

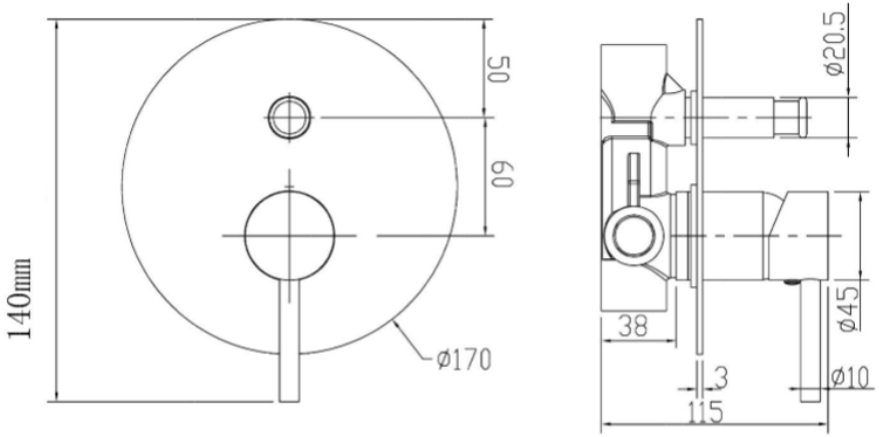

P. 1300 62 11 51 F. 1300 113 901 E. info@formebathroomcollection.com.au.